Tel: (+44)(0)1943 870670 Fax: (+44)(0)1943 870631 E-mail: sales@gmtrubber.com www.gmtrubber.com

Machine Feet

A variety of sizes are available with many held in stock. Different styles machine feet can be supplied with or without rebound control and with a square (4 hole) or an oval (2 hole) flange. Rubber hardness' shown in bold type are more generally available.

Machine Feet

A variety of sizes are available with many held in stock. Different styles machine feet can be supplied with or without rebound control and with a square (4 hole) or an oval (2 hole) flange. Rubber hardness' shown in bold type are more generally available.

Dimensions

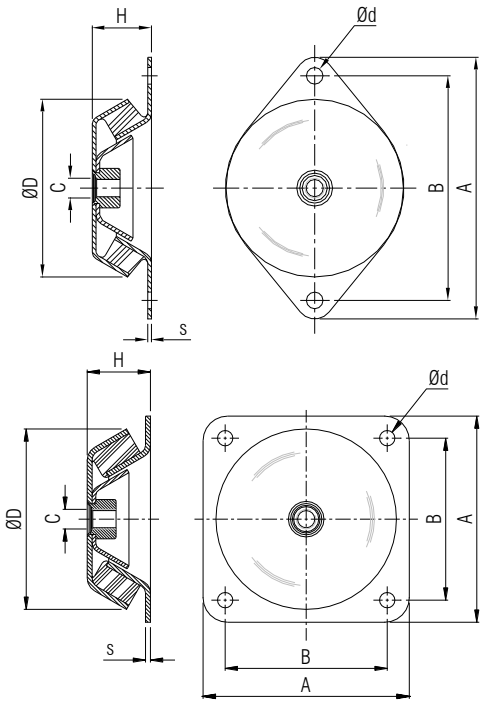

Part No.	A (mm)	B (mm)	H (mm)	ØD (mm)	s (mm)	Ød (mm)	G
M/C-MF1890	170.0	140.0	39.0	106.0	3.0	13.0	M12
M/C-MF1892	220.0	180.0	51.5	147.0	4.0	16.5	M20
M/C-MF1900	128.0	104.0	30.0	77.0	2.0	9.0	M10
M/C-MF1901	128.0	110.0	30.0	77.0	2.0	9.0	M10
M/C-MF1902	144.0	124.0	35.0	94.5	2.5	10.0	M10
M/C-MF1903	172.0	144.0	38.0	108.0	3.0	13.5	M16
M/C-MF1904	186.0	158.0	42.0	121.0	3.0	13.5	M16
M/C-MF1905	212.0	182.0	48.0	144.0	3.0	13.5	M16

Part No.	A (mm)	B (mm)	H (mm)	ØD (mm)	s (mm)	Ød (mm)	G
M/C-MF1891	168.0	132.0	51.5	147.0	4.0	12.5	M16
M/C-MF1906	170.0	140.0	58.0	162.0	4.0	14.5	M20
M/C-MF1893	184.0	150.0	63.0	172.0	4.0	13.0	M20

Compression Characteristics

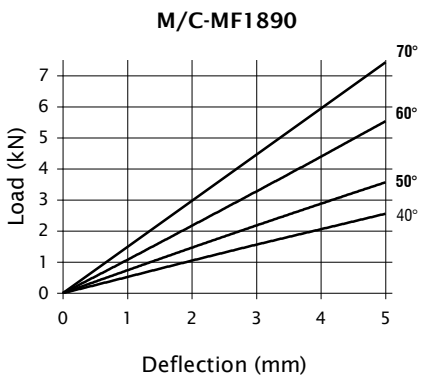

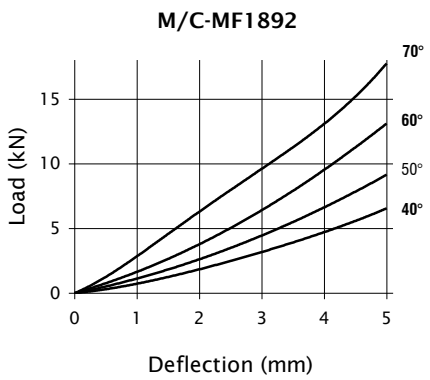

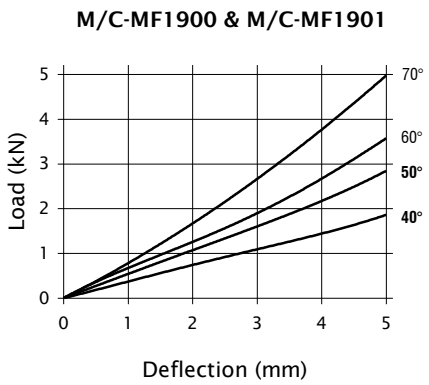

Note: There is a possible deviation of ±20% in the above load/deflection graphs due to production and hardness tolerances

Tel: (+44)(0)1943 870670 Fax: (+44)(0)1943 870631 E-mail: sales@gmtrubber.com www.gmtrubber.com

Compression Characteristics Cont'd

M/C-MF1902

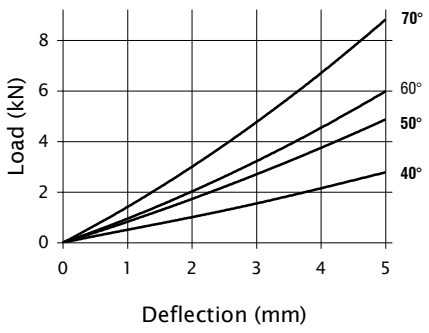

M/C-MF1903

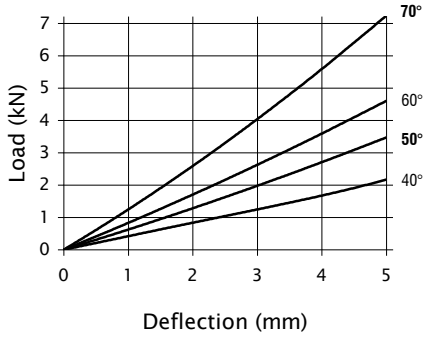

M/C-MF1904

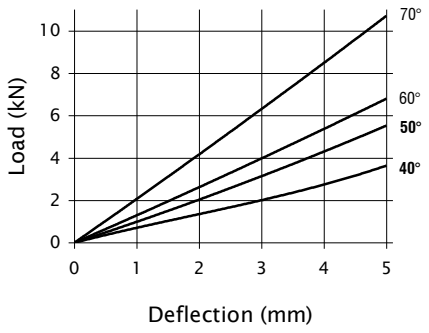

M/C-MF1905

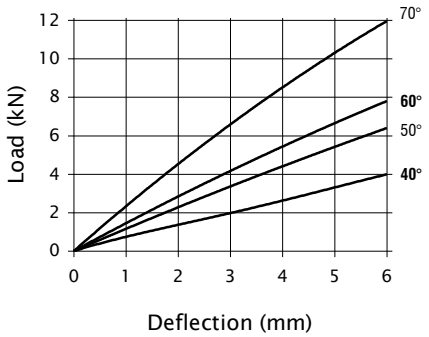

M/C-MF1891

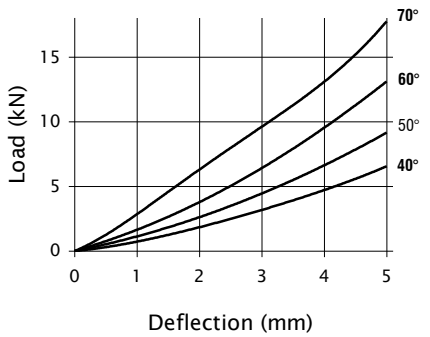

M/C-MF1906

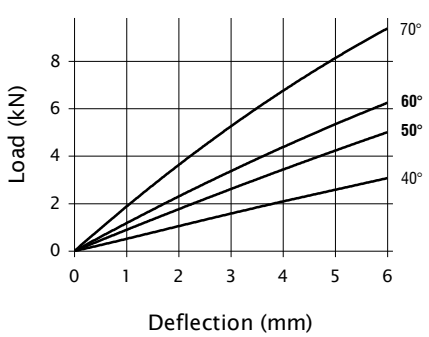

M/C-MF1893

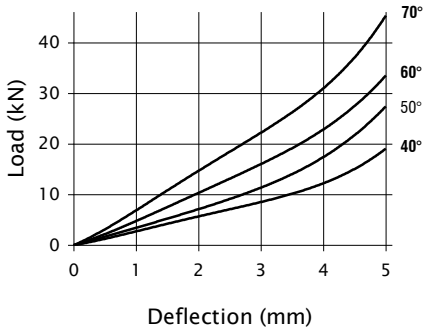

Note: There is a possible deviation of ±20% in the above load/deflection graphs due to production and hardness tolerances

Tel: (+44)(0)1943 870670 Fax: (+44)(0)1943 870631 E-mail: sales@gmtrubber.com www.gmtrubber.com

Special Machine Feet

M/C-MF1783

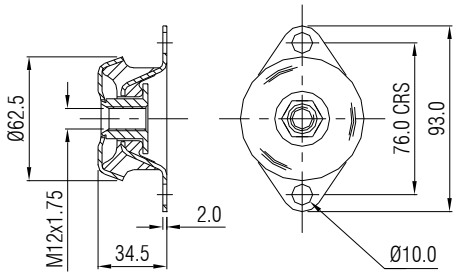

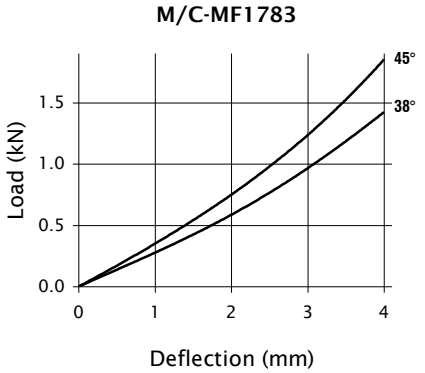

M/C-MF1060

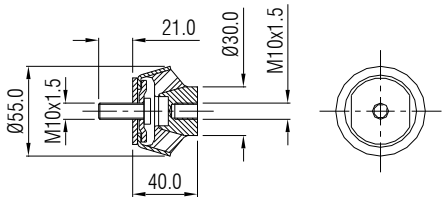

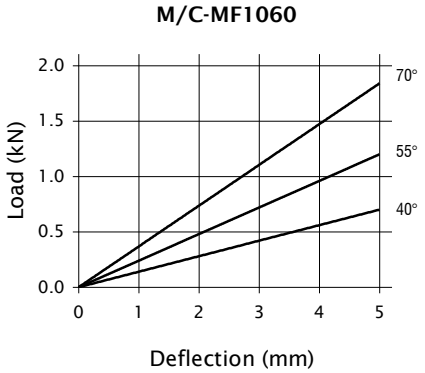

M/C-MF2171

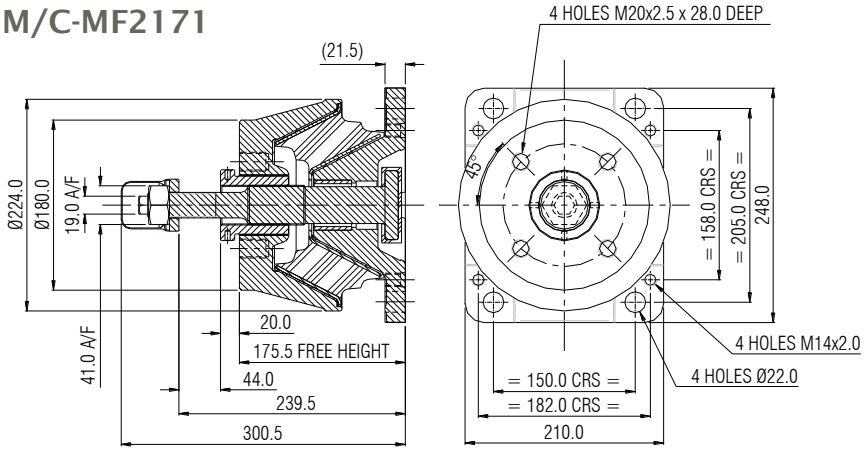

Note: Please Contact GMT For Any Additional Information Including Load/Deflection Data

M/C-MF2172

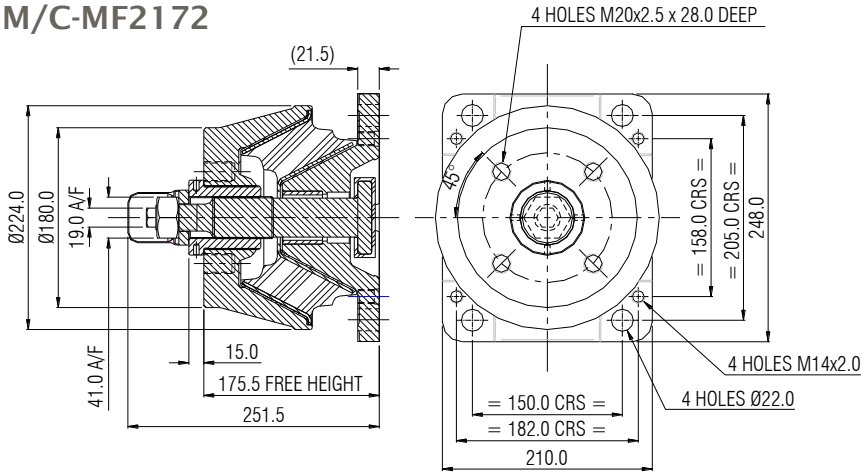

Note: Please Contact GMT For Any Additional Information Including Load/Deflection Data

Note: There is a possible deviation of ±20% in the above load/deflection graphs due to production and hardness tolerances

M/C-MF2173

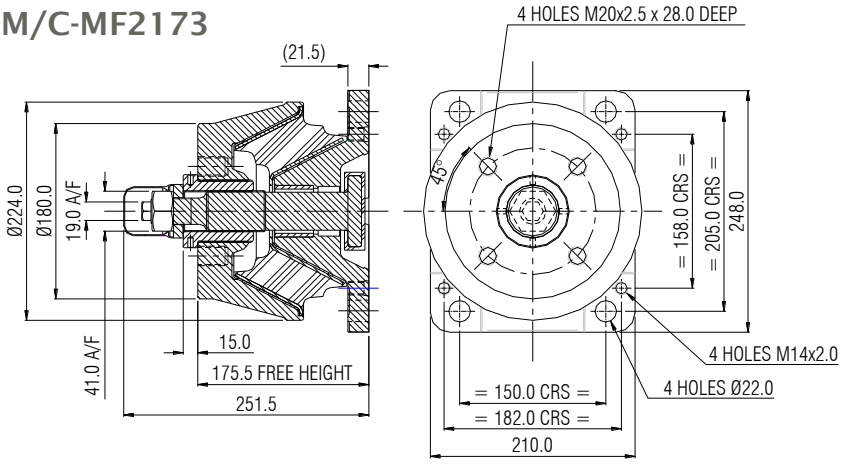

Note: Please Contact GMT For Any Additional Information Including Load/Deflection Data

M/C-MF2174

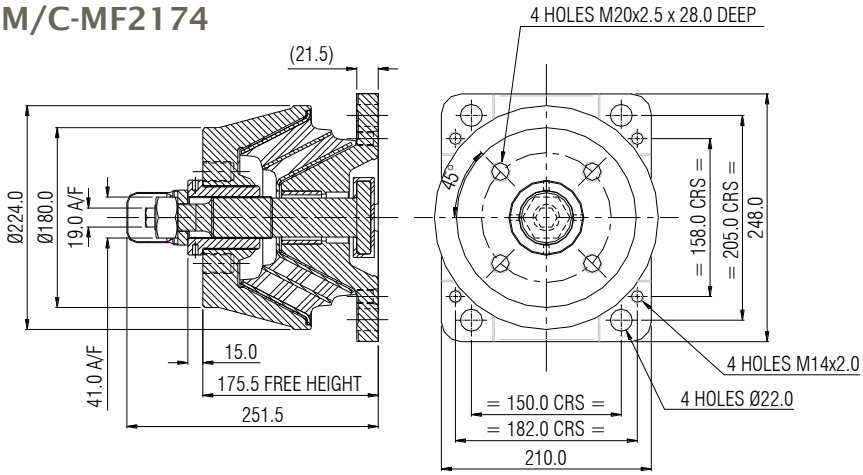

Note: Please Contact GMT For Any Additional Information Including Load/Deflection Data

M/C-MF2175

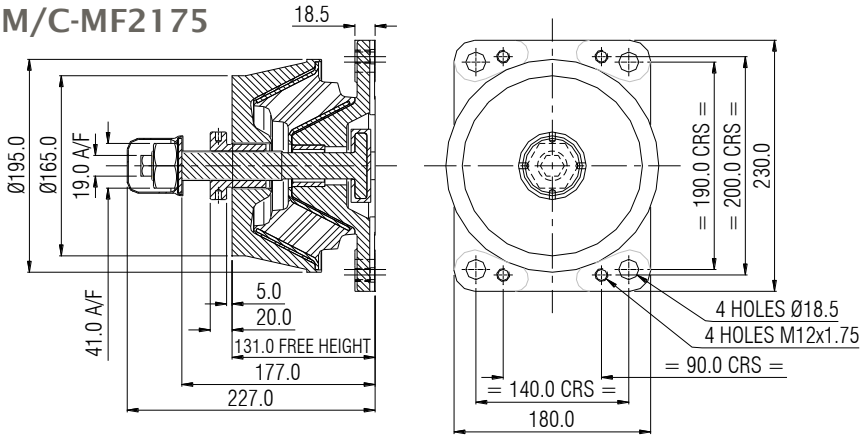

Note: Please Contact GMT For Any Additional Information Including Load/Deflection Data

M/C-MF2176

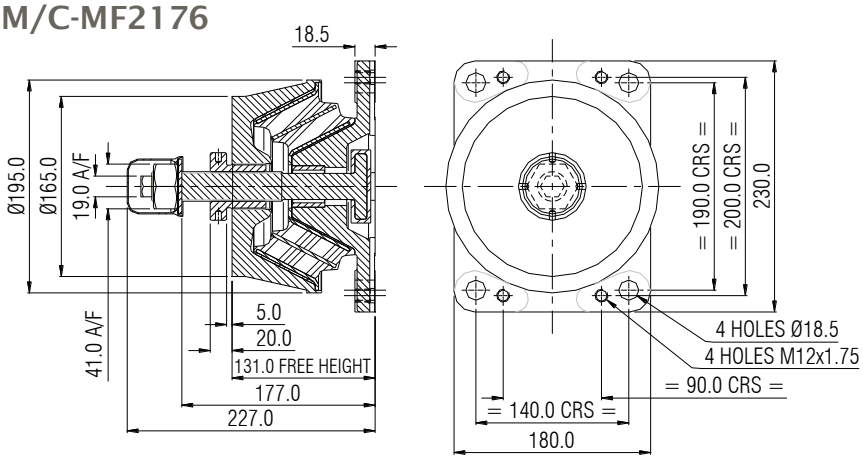

Note: Please Contact GMT For Any Additional Information Including Load/Deflection Data

M/C-MF2177

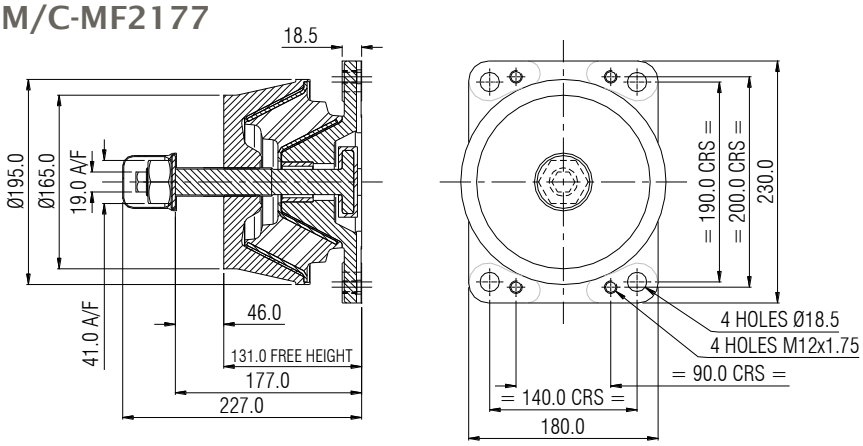

Note: Please Contact GMT For Any Additional Information Including Load/Deflection Data

M/C-MF2178

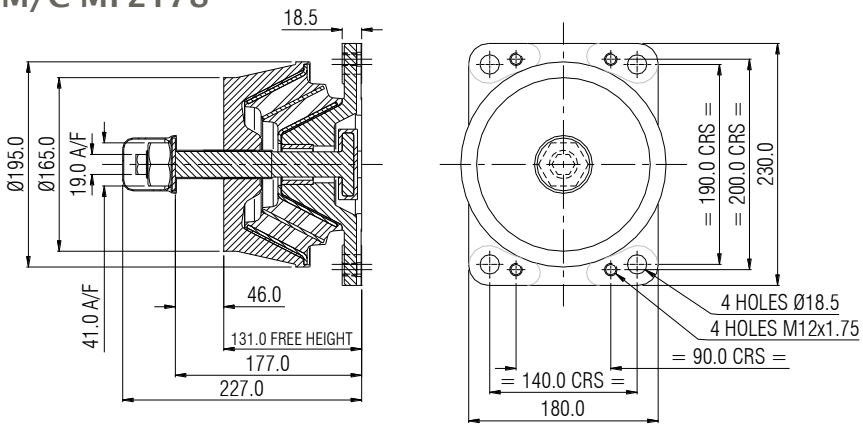

Note: Please Contact GMT For Any Additional Information Including Load/Deflection Data

Wind Turbine - Generator Mounting (MF2202)

GMT Generator Mountings are used by major manufacturers of large wind turbines for installations across the world. They have been developed for the bedding of wind turbine generators. For compensation of manufacturing tolerances the generator mountings are generally height adjustable. All generator mountings have a rebound control stop in order to transfer tensile loads safely in case of short circuit. Existing products can be used or new purpose designed mountings can be designed to suit specific customer application requirements.

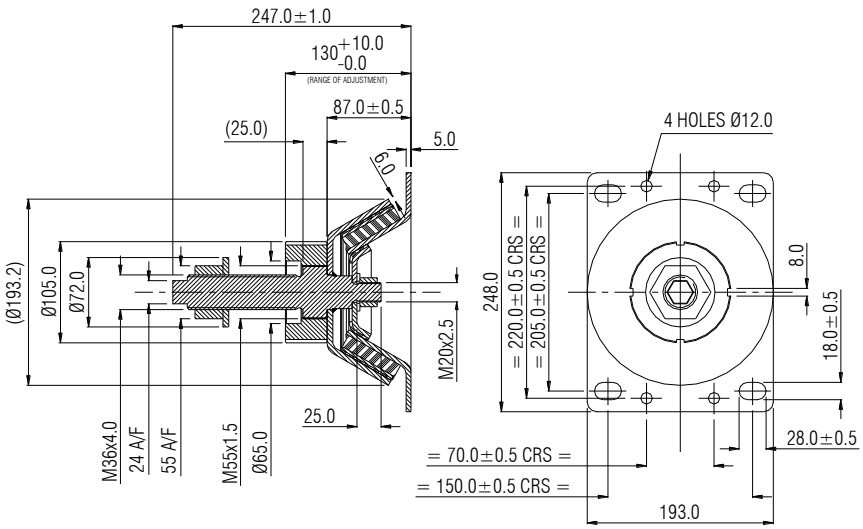

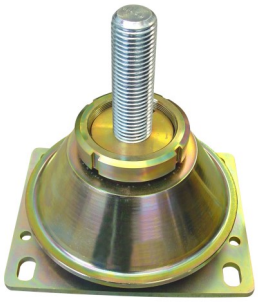

Triflex Mountings

Mounts for engines, compressors, generators, marine engines and other installations where anti-vibration mounts are required. GMT manufacture two main types of Triflex mountings, Type 1 and Type 2. These are available in a variety of sizes with many held in stock. Please contact our technical sales department for assistance with selection.

Triflex Mountings (Type 1)

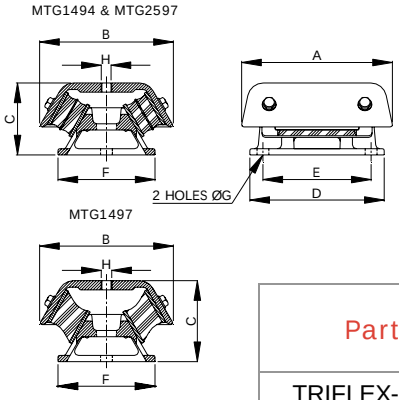

GMT Triflex Type 1 mountings have been developed to provide vibration isolation against heavy duty machinery including diesel generators, compressors, precision machinery and electronic installations. The mountings provide relatively high deflections and the design is such that there are different degrees of stiffness in the three main axes. A rebound control option is available upon request.

Part No.	A (mm)	B (mm)	C (mm)	D (mm)	E (mm)	F (mm)	ØG (mm)	H
TRIFLEX-MTG2597	122	132	75	115	90	84	13	M16
TRIFLEX-MTG1494	230	204	110.5	205	165	148	18	M16
TRIFLEX-MTG1497	230	204	123.5	205	165	148	18	M16

Compression Characteristics

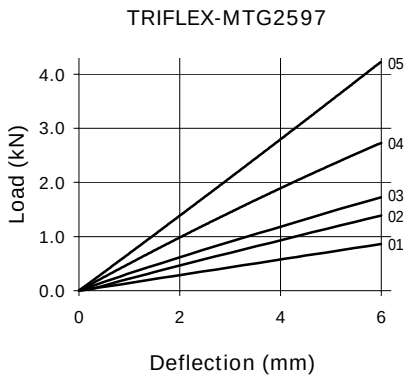

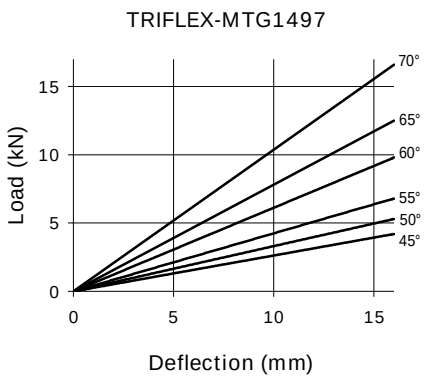

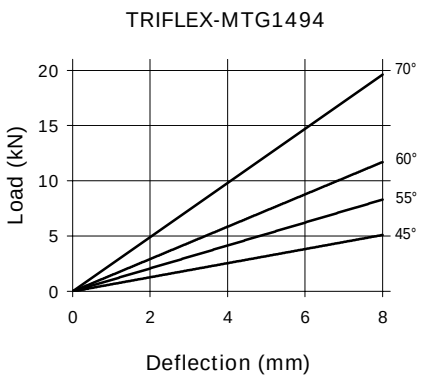

Note: There is a possible deviation of ±20% in the above load/deflection graphs due to production and hardness tolerances

Stiffness Ratio

The Triflex 1 mountings have different degrees of stiffness in the three main axes, vertical, longitudinal and lateral.

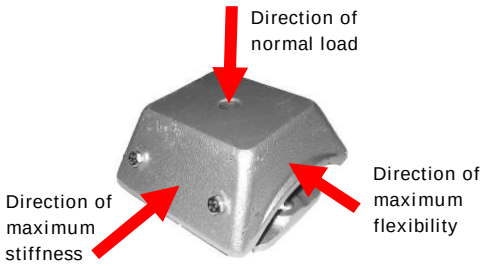

Crankshaft Direction

For GMT Triflex Type 1 mountings, the recommended orientation for installation is as detailed below:

Type 1

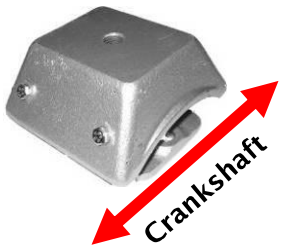

Triflex Mountings (Type 2)

GMT Triflex Type 2 mountings have been developed for the insulation of static and mobile machines and engines. Mounts have DNV type approval for the flexible mounting of propulsion and auxiliary machinery. Applications include generators, marine engines, compressors, fans and pumps. The mountings provide different degrees of stiffness in the three main axes and also have integrated rebound control.

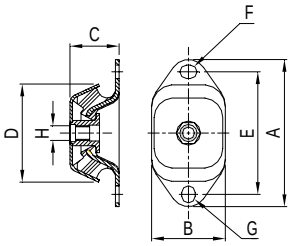

Part No.	A (mm)	B (mm)	C (mm)	D (mm)	E (mm)	F (mm)	G (mm)	H
TRIFLEX-MTG1086	120	60	40	80	100	11x14	11x14	M12
TRIFLEX-MTG1087	184	75	50	103.5	140	30x13	20x13	M16
TRIFLEX-MTG1088	230	112	70	133.0	182	34x18	26x18	M20

Compression Characteristics

TRIFLEX-MTG1086

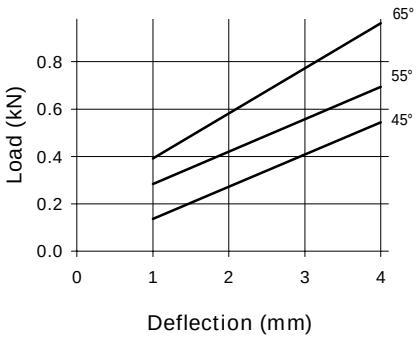

TRIFLEX-MTG1087

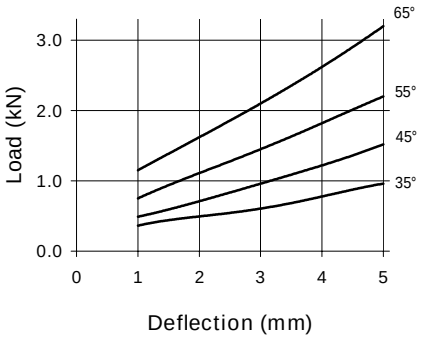

TRIFLEX-MTG1088

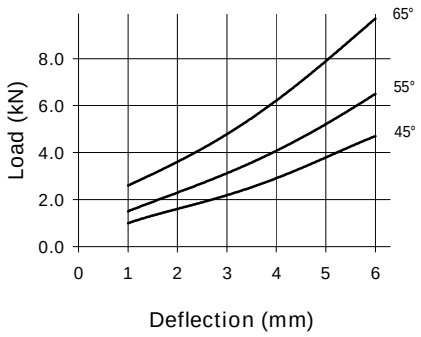

Note: There is a possible deviation of ±20% in the above load/deflection graphs due to production

Stiffness Ratio

The design of the Triflex 2 mountings provides different degrees of stiffness in the three main axes, vertical, longitudinal and lateral.

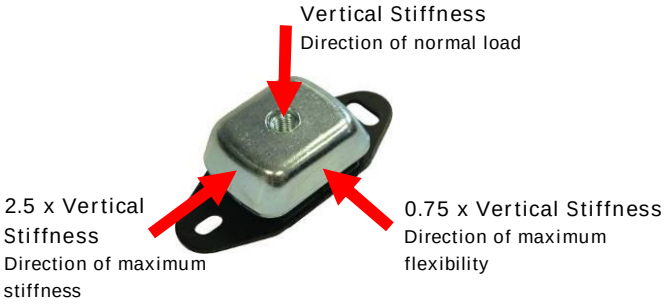

Crankshaft Direction

For GMT Triflex Type 2 mountings, the recommended orientation for installation is as detailed below:

Type 2

Adjustable Studs

GMT Adjustable studs are available in 4 main sizes and are suitable for use with the Triflex mounting and machine feet range where height adjustment is required.

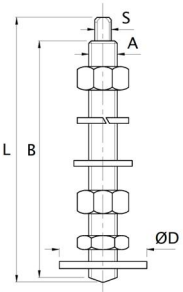

Part No.	A	S (mm)	ØD (mm)	B (mm)	L (mm)	Alternative thread lengths, B (mm)
STUD-M3120	M10 x 1.50	7x7	30	100	110	125, 150
STUD-M3123	M12 x 1.75	7x7	37	100	112	125, 150, 200
STUD-M3128	M16 x 2.00	10x10	50	125	140	100, 150, 200, 250
STUD-M3133	M20 x 2.50	13x13	60	150	167	100, 200, 250

GMT RUBBER-METAL-TECHNIC LTD Tel: (+44)(0)1943 870670 Fax: (+44)(0)1943 870631 E-mail: sales@gmtrubber.com www.gmtrubber.com

Large Triflex Mountings

GMT Large Triflex Mountings have been developed for the insulation of static and mobile machines and engines for the load range 8kN to 20kN. Applications include medium/large marine engines and generators. The mounts provide different degrees of stiffness in the three main axes and also have integrated rebound control. These parts can be manufactured and supplied with or without the adjustable top bolt and with or without the four tie down bolts.

TRIFLEX-MTG2019

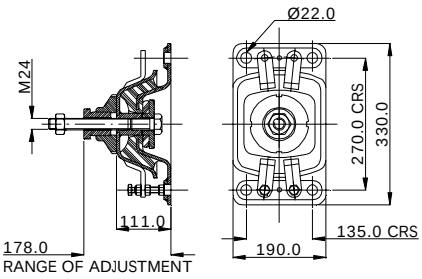

TRIFLEX-MTG2218

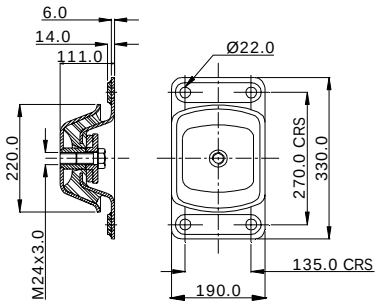

Compression Characteristics

TRIFLEX-MTG2019/MTG2218
VERTICAL

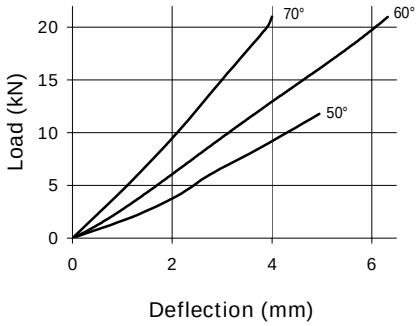

TRIFLEX-MTG2019/MTG2218
LATERAL

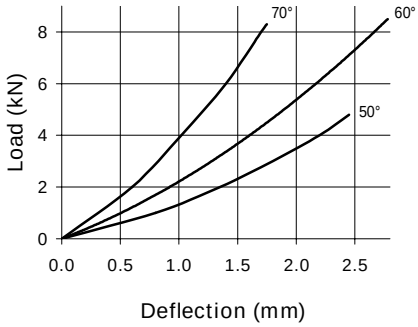

TRIFLEX-MTG2019/MTG2218
LONGITUDINAL

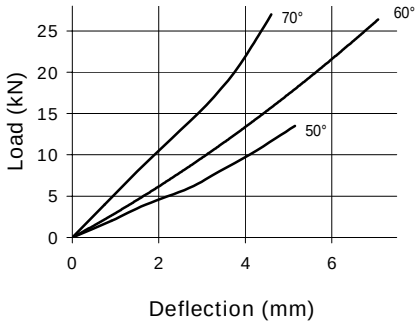

Note: There is a possible deviation of ±20% in the above load/deflection graphs due to production and hardness tolerances

GMT RUBBER-METAL-TECHNIC LTD Tel: (+44)(0)1943 870670 Fax: (+44)(0)1943 870631 E-mail: sales@gmtrubber.com www.gmtrubber.com

IS Mountings

Tooling is available for a range of sizes and styles though minimum order quantities may apply. Parts are usually manufactured in chloroprene rubber. The construction of these parts is such that the stiffness in the three axes is very similar.

Dimensions

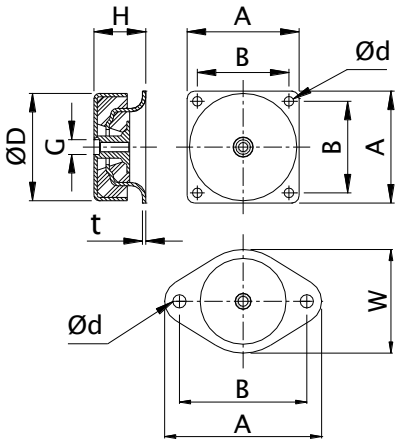

Part No.	A (mm)	B (mm)	H (mm)	ØD (mm)	G (mm)	t (mm)	Ød (mm)	W (mm)
IS-MTG1460	60.5	49.5	28.0	58.0	M6x1.0	1.8	5.2	—-
IS-MTG1461	77.0	61.0	28.0	58.0	M8x1.25	1.8	9.0	—-
IS-MTG1462	76.0	63.5	38.0	76.0	M10x1.5	2.5	6.8	—-
IS-MTG1463	90.0	74.0	38.0	76.0	M12x1.75	2.5	9.0	—-
IS-MTG1464	133.4	108.0	63.0	123.8	M16x2.0	4.0	12.0	—-
IS-MTG1465	175.0	143.0	90.0	168.0	M16x2.0	5.0	13.5	—-
IS-MTG1466 **Note: 2 Hole Flange**	106.0	86.0	28.0	58.0	M8x1.25	1.8	9.0	70.0

Compression Characteristics

IS-MTG1460, IS-MTG1461 IS-MTG1466

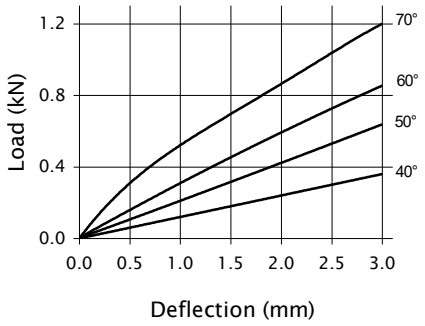

IS-MTG1462, IS-MTG1463

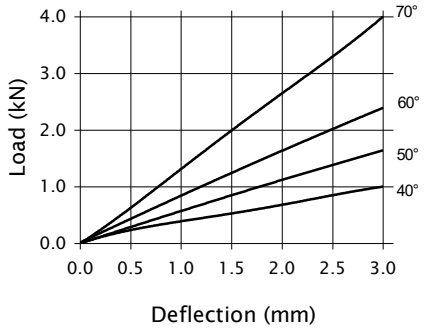

IS-MTG1464

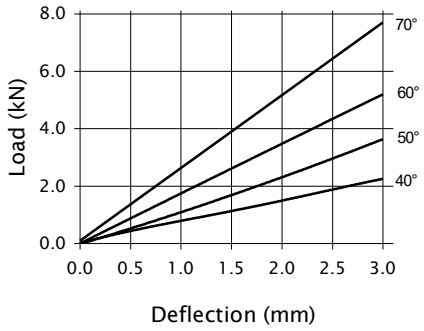

IS-MTG1465

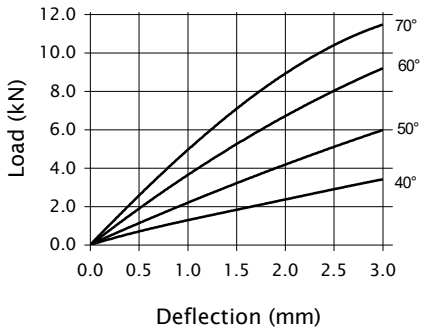

Note: There is a possible deviation of ±20% in the above load/deflection graphs due to production and hardness tolerances

GMT RUBBER-METAL-TECHNIC LTD Tel: (+44)(0)1943 870670 Fax: (+44)(0)1943 870631 E-mail: sales@gmtrubber.com www.gmtrubber.com

Air Mounts

Available in 3 sizes GMT Air Springs provide isolation against low frequency attenuations and offer insulation from structure borne vibrations . Minimum order quantities may apply unless parts are available from stock.

Dimensions

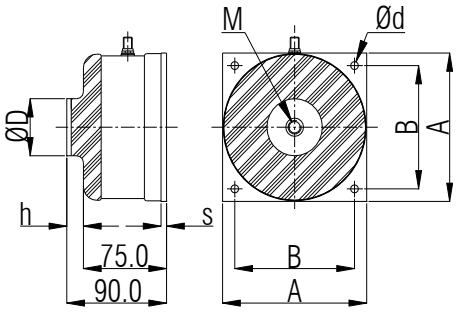

Part No.	A (mm)	B (mm)	M	ØD (mm)	Ød (mm)	h (mm)	s (mm)
AIR-MTG1501	130.0	108.0	M12x1.75	50.0	7.0	12.0	5.0
AIR-MTG1502	255.0	215.0	M16x2.0	129.0	14.0	16.0	6.0
AIR-MTG1503	470.0	406.0	M24x1.5	300.0	20.0	24.0	8.0

Compression Characteristics

Part No.	Vertical Loading		Stiffness Characteristics
	Minimum Recommended	Maximum Permissible	Vertical : Horizontal @ Pressure
AIR-MTG1501	0.5kN	2.0kN	1 : 1.8 @ 0 bar 1 : 1.5 @ 3 bar 1 : 1.0 @ 6 bar
AIR-MTG1502	2.0kN	10.0kN	1 : 3.2 @ 0 bar 1 : 1.8 @ 3 bar 1 : 1.6 @ 6 bar
AIR-MTG1503	10.0kN	50.0kN	1 : 3.1 @ 0 bar 1 : 1.7 @ 3 bar 1 : 1.2 @ 6 bar

Note: The maximum pressure to which Air Mountings should normally be inflated is 6bar.

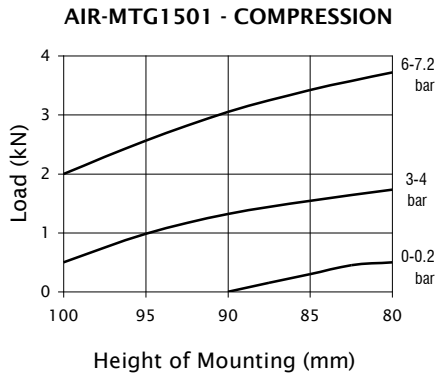

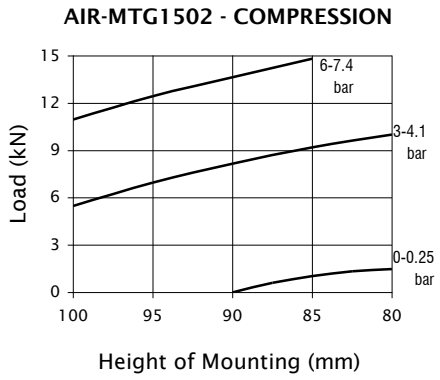

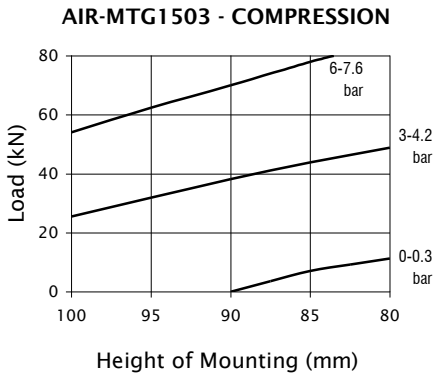

Note: Nominal height of mountings = 90.0mm

Note: There is a possible deviation of ±20% in the above load/deflection graphs due to production tolerances